ELKAY®

SPECIFICATIONS

Gourmet Lustertone® Undermount Single Bowl Sink
Model ELUHAD Series - A.D.A. Compliant

NEW ELUH Installation Options

ELUH models have been redesigned to accommodate 1/2" reveal and no reveal installation options.

GENERAL

Highest quality sink formed of #18 (1.2mm) gauge, type 304 (18-8) nickel bearing stainless steel. Undermount.

DESIGN FEATURES

ELUHAD Bowl Depth: 4-1/2" (114mm), 5" (127mm) or 5-1/2" (140mm)

Finish: Exposed surfaces are hand polished to a Lustrous Highlighted Satin finish.

Underside: Sound dampening pads with spray undercoating to dampen sound and reduce condensation.

OTHER

Drain Opening: 3-1/2" (89mm) center rear location.

NOTE: All Elkay undermount sinks are designed to attach to the underside of any solid surface countertop.

Sink complies with ASME A112.19.3/ CSA B45.4

Sinks are listed by IAPMO® as meeting the applicable requirements of the Uniform Plumbing Code®, International Plumbing Code®, and National Plumbing Code of Canada.

These sinks are compliant to ADA and ANSI/ICC A117.1 accessibility requirements when installed according to the requirements outlined in these standards.

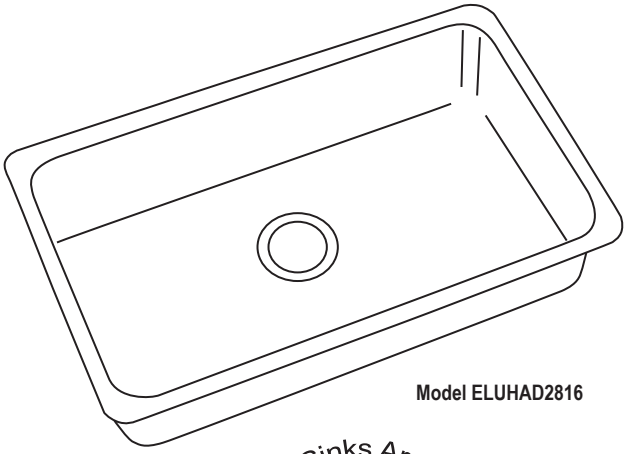

Model ELUHAD2816

Sinks Are MADE IN USA™

SINK DIMENSIONS*

Model Number	Overall Length A	Overall Width B	Inside Each Bowl Length C	Inside Each Bowl Width D	Inside Each Bowl Depth	Cutout in Countertop	Template Packed with Every Sink	Minimum Cabinet Size
ELUHAD1116	14 (356mm)	18-1/2 (470mm)	11-1/2 (292mm)	16 (406mm)	**	See template packed with sink.	1000001422	18 (457mm)
ELUHAD1212	14-1/2 (368mm)	14-1/2 (368mm)	12 (305mm)	12 (305mm)	**		1000001423	18 (457mm)
ELUHAD1316	16 (406mm)	18-1/2 (470mm)	13-1/2 (343mm)	16 (406mm)	**		1000001399	21 (533mm)
ELUHAD1414	16-1/2 (419mm)	16-1/2 (419mm)	14 (356mm)	14 (356mm)	**		1000001265	21 (533mm)
ELUHAD1418	16-1/2 (419mm)	20-1/2 (521mm)	14 (356mm)	18 (457mm)	**		1000001307	21 (533mm)
ELUHAD1616	18-1/2 (470mm)	18-1/2 (470mm)	16 (406mm)	16 (406mm)	**		1000001420	24 (610mm)
ELUHAD1916	21-1/2 (546mm)	18-1/2 (470mm)	19 (483mm)	16 (406mm)	**		1000001424	27 (686mm)
ELUHAD2115	23-1/2 (597mm)	18-1/4 (464mm)	21 (533mm)	15-3/4 (400mm)	**		1000001400	27 (686mm)
ELUHAD2816	30-1/2 (795mm)	18-1/2 (470mm)	28 (711mm)	16 (406mm)	**		1000001414	36 (914mm)

* Length is left to right. Width is front to back.

** Available in 4-1/2" (114mm), 5" (127mm) or 5-1/2" (140mm).

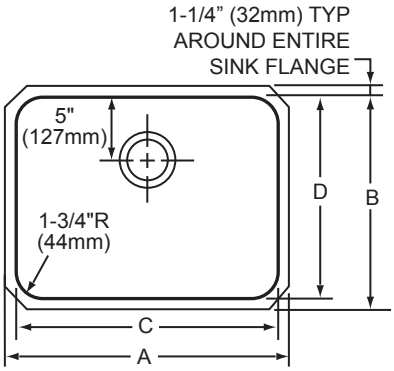

Installation Profile

1/8" (3mm) Overhang

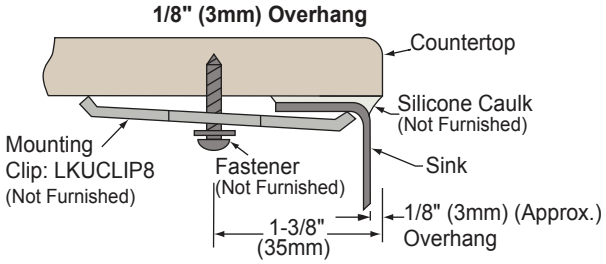

1/2" (13mm) Reveal

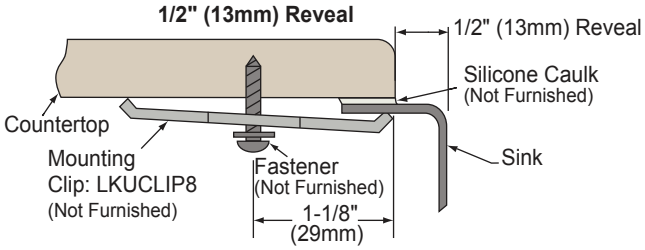

In keeping with our policy of continuing product improvement, Elkay reserves the right to change product specifications without notice. Please visit elkay.com for the most current version of Elkay product specification sheets.

This specification describes an Elkay product with design, quality, and functional benefits to the user. When making a comparison of other producers' offerings, be certain these features are not overlooked.

Elkay
elkay.com

2222 Camden Court
Oak Brook, IL 60523

© 2014 Elkay

CONCETTO
Single-lever sink mixer 1/2"
MODEL # 32665

Pure Freude an Wasser

GROHE

GROHE America, Inc | 200 North Gary Avenue, Suite G, Roselle, IL 60172
Phone: +1 (800) 444-7643 | Fax: +1 (800) 225-2778 | us-customerservice@grohe.com

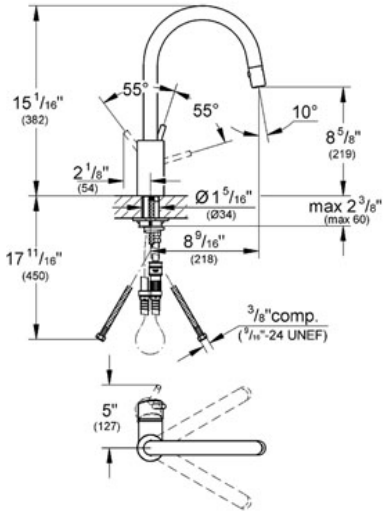

ADA

Product Description:
Single-lever sink mixer 1/2"

Standard Specification:
- **GROHE StarLight®** finish
- **GROHE SilkMove®** ceramic cartridge
- Single hole installation
- Swivel Spout
- Extractable integrated trigger spray
- Integrated non-return valve
- Stainless Steel Braided Flexible Supplies
- Quick installation system
- **Protected against backflow**
- Max Flow Rate 1.75 gpm (6.6 L/min)
- Variable Handle Positioning

Applicable Codes & Standards:
- Energy Policy Act of 1992
- NSF 61
- ASME A112.18.1/CSA B125.1
- US Federal and State material regulations
- ICC/ANSI A117.1
- CalGreen

Color:
- ❑ 32665 001 chrome
- ❑ 32665 DC1 supersteel